Mohan's Precast USA, Inc.

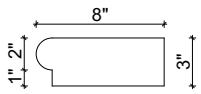

Side view

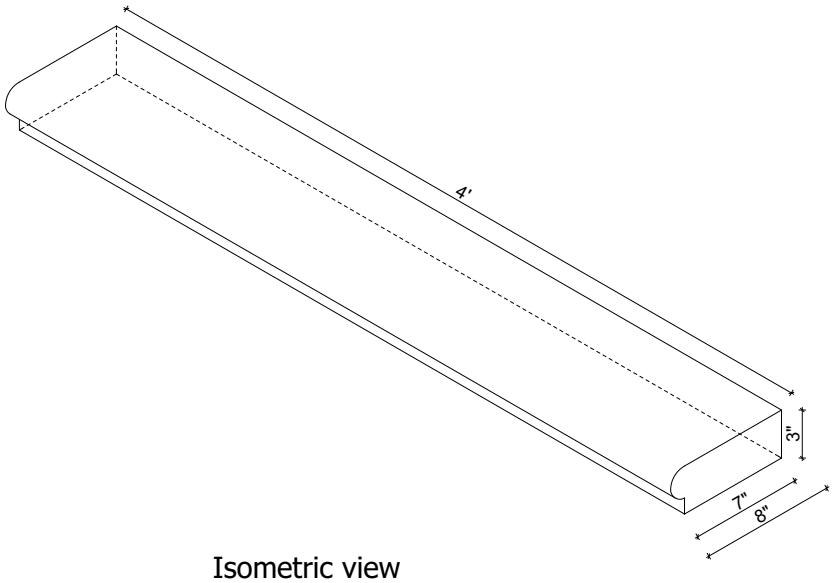

Isometric view

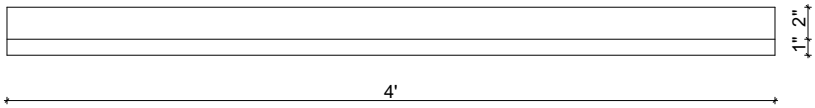

Front view

Qty:

(Color may vary) (Standard lenght 48")

Product ID: BNWDSL488	Date:	
Client:	Project:	
	Approved by:	

Color:	White ☐ Buff ☐ Gray ☐ Custom ☐	Texture: Smooth ☐ Light Etch ☐ Heavy Etch ☐	Precast ☐ Cast Stone ☐ Limestone ☐